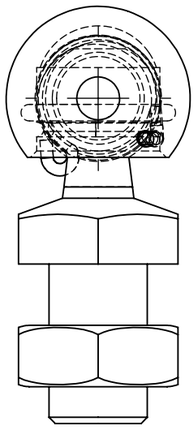

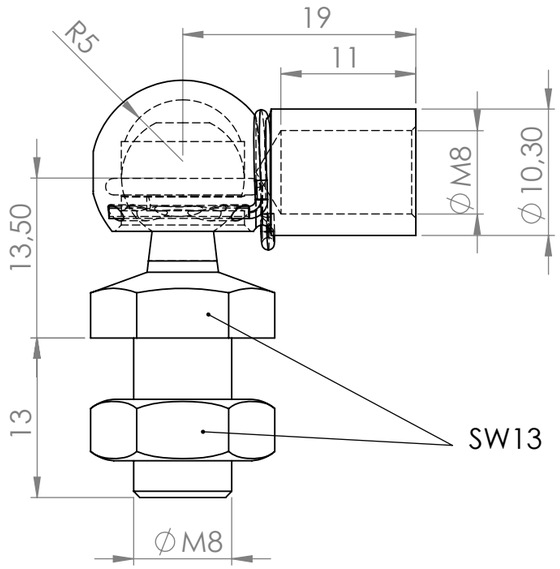

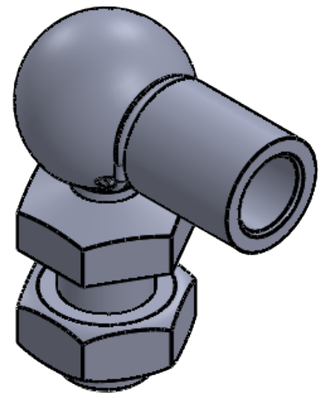

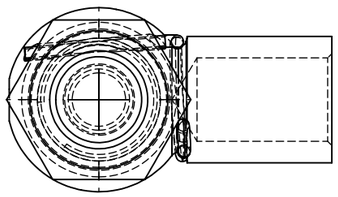

Germany: +49 (0) 322 21090223
Netherlands: +31 (0) 541 682186
Poland: +48 (0) 6 8888 1005
info@gasfedern.eu
info@springmasters.nl
info@sprezynygazowe.pl

SPRINGMASTERS
WWW.GASFEDERN.EU

TITLE: 13.M8L19CS10M8		A3
DWG NO.	REVISION	
DO NOT SCALE DRAWING	SCALE:2:1	SHEET 1 OF 1