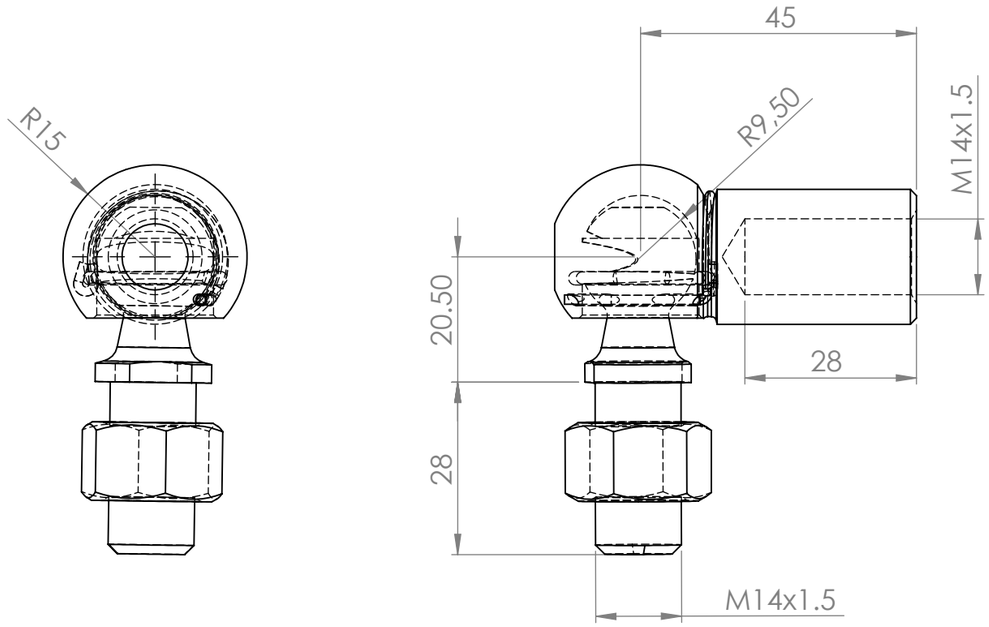

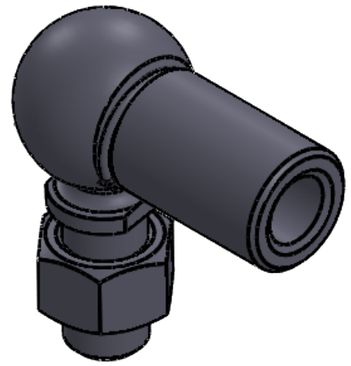

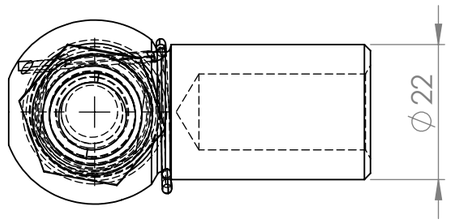

SPRINGMASTERS
WWW.GASFEDERN.EU

Germany: +49 (0) 322 21090223
Netherlands: +31 (0) 541 682186
Poland: +48 (0) 6 8888 1005

info@gasfedern.eu
info@springmasters.nl
info@sprezynygazowe.pl

TITLE: 13.M14L45CS19M14

DWG NO.	REVISION	A3
DO NOT SCALE DRAWING	SCALE:1:1	SHEET 1 OF 1